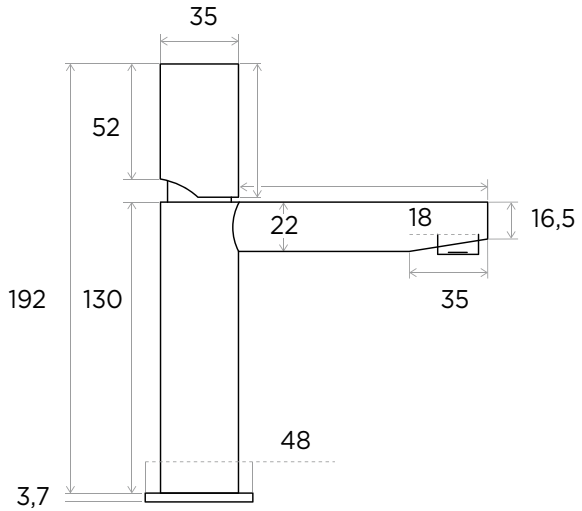

> SIZES IN MM.

PRODUCT DATA

Collection : Arc 2.1

Product code :	Finish/Colour :
ARC-2.1-POL	POLISHED CHROME
ARC-2.1-BRU	BRUSHED NICKLE
ARC-2.1-SS	STAINLESS STEEL
ARC-2.1-GRA	GRAPHITE
ARC-2.1-BLA	BLACK MATT CHROME
ARC-2.1-TROS	ROSE GOLD
ARC-2.1-GOL	GOLD
ARC-2.1-BRA	BRASS

TECHNICAL INFORMATION

Product type : MONO BASIN MIXER
Material : BRASS
Connection Size : 1/2"
Water pressure : 0.2-5 BAR
RMP : 0.5 BAR LP
IN ACCORDANCE WITH ASME 112.18.1

MONO BASIN
DECK MOUNTED
SINGLE LEVER
WITH WATER FLOW AERATOR

SCOPE OF DELIVERY

MONO BASIN MIXER
2 X 1/2" FLEXIBLE PIPES
BASE PLATE
FIXING KIT
INSTALLATION MANUAL
CARE & MAINTENANCE GUIDE

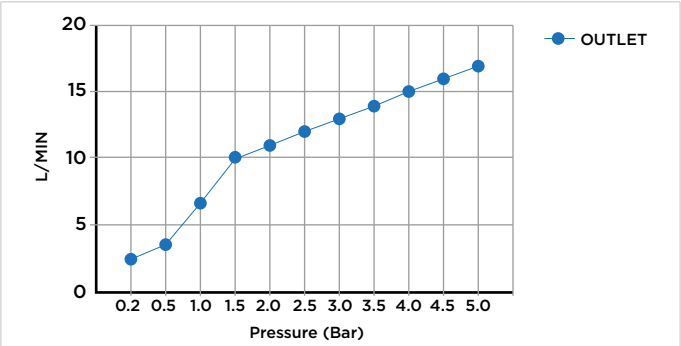

INTERNATIONAL WATER & WELLNESS

PRODUCT	COLLECTION	REFERENCE
Tap	Arc 2.1	Arc 2.1