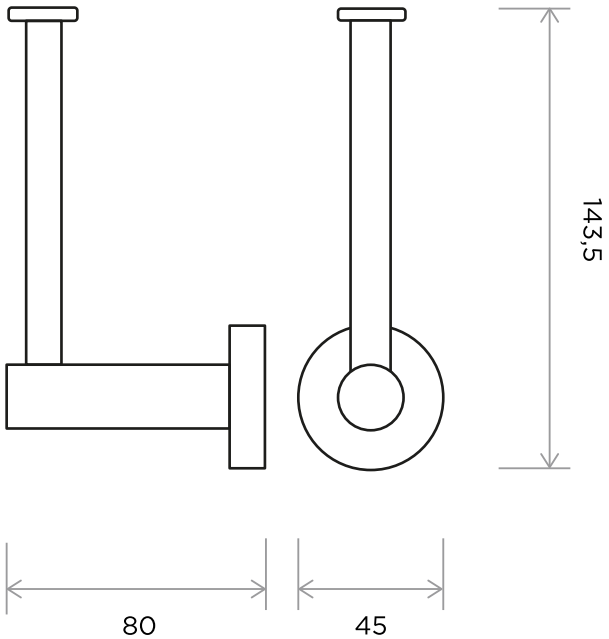

> SIZES IN MM.

INTERNATIONAL
WATER & WELLNESS

COLLECTION	PRODUCT	CODE / COLOUR
Accessories / Arco	Roll Holder Spare	ARC-SPRH-POL POLISHED CHROME ARC-SPRH-BRU BRUSHED NICKLE ARC-SPRH-BLA STAINLESS STEEL ARC-SPRH-GRA GRAPHITE ARC-SPRH-SS BLACK MATT CHROME ARC-SPRH-ROS ROSE GOLD ARC-SPRH-GOL GOLD ARC-SPRH-BRA BRASS