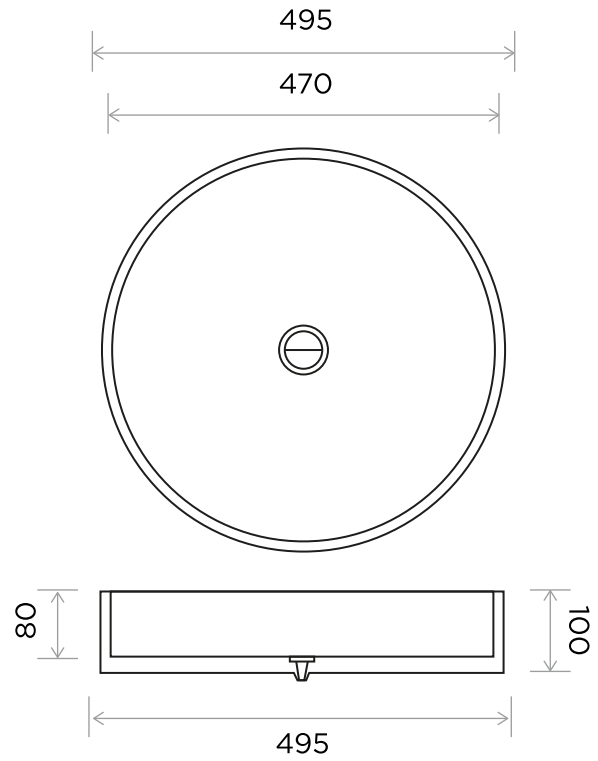

INTERNATIONAL
WATER & WELLNESS

PRODUCT	COLLECTION	PRODUCT CODE
Circ LSC counter top basin ø495x100mm (ø19"x4").	**Sinks** LSC	MATT FINISH: CIR-S/L-WMAT POLISHED FINISH: CIR-S/L-WPOL