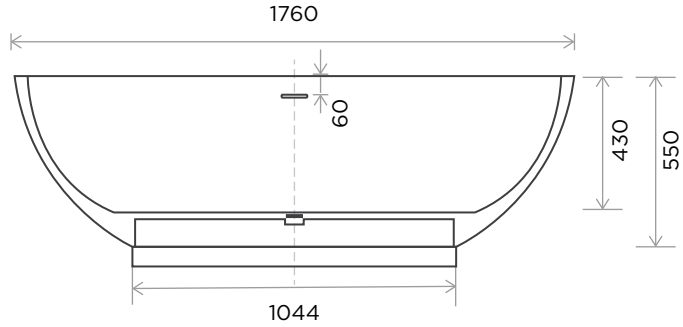

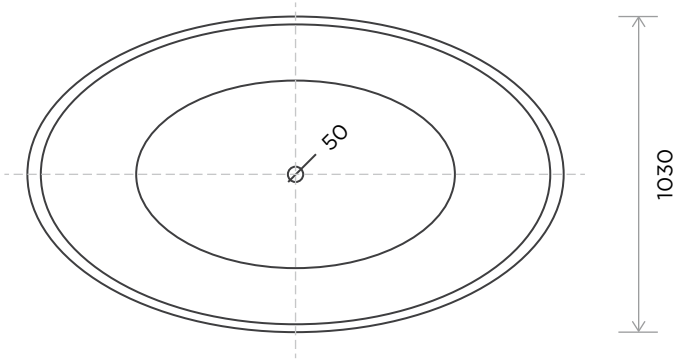

> SIZES IN MM.

INTERNATIONAL
WATER & WELLNESS

PRODUCT	COLLECTION	PRODUCT CODE
Oval LSC free standing bathtub available in 1760x1030x550mm (69"x41"x22").	**Bathtub** LSC	MATT FINISH: OVA-T/L-WMAT POLISHED FINISH: OVA-T/L-WPOL