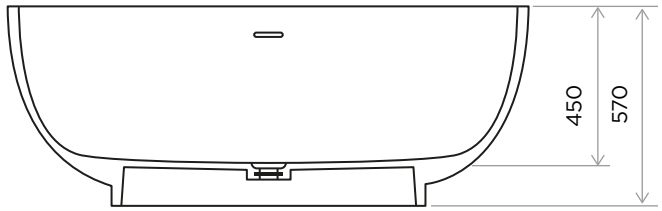

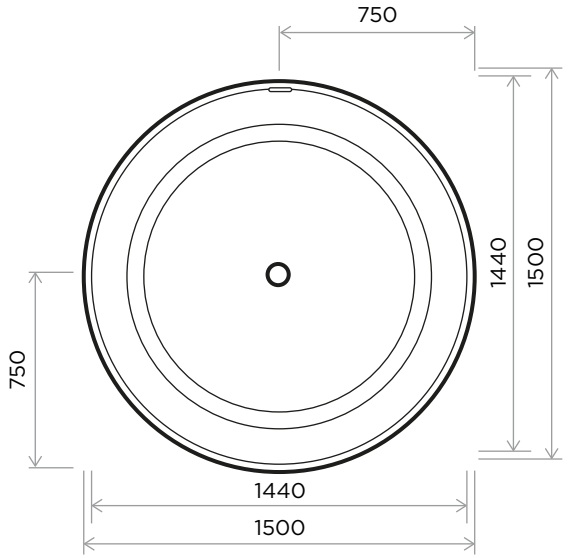

> SIZES IN MM.

INTERNATIONAL
WATER & WELLNESS

PRODUCT	COLLECTION	PRODUCT CODE
Round 150 LSC freestanding bathtub available in Ø1500x550mm (Ø59"x22").	**Bathtub** LSC	MATT FINISH: ROU150-T/L-WMAT POLISHED FINISH: ROU150-T/L-WPOL