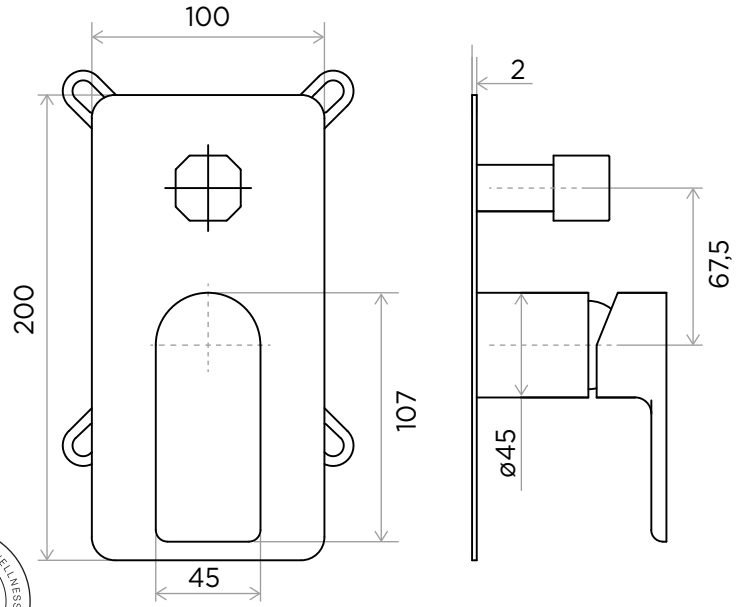

> SIZES IN MM.

PRODUCT DATA

Mohs 2

Product code:	Finish/Colour :
MO2-S/C-POL	POLISHED CHROME
MO2-S/C-BRU	BRUSHED NICKLE
MO2-S/C-SS	STAINLESS STEEL
MO2-S/C-GRA	GRAPHITE
MO2-S/C-BLA	BLACK MATT CHROME
MO2-S/C-ROS	ROSE GOLD
MO2-S/C-GOL	GOLD
MO2-S/C-BRA	BRASS

TECHNICAL INFORMATION

- ASME A112.18.1
- CSA B125.1
- BS EN 817-2008
- WALL MOUNTED PRESSURE BALANCE VALVE
- TURN DIVERTER FOR 2 OUTLES WITH SERVICE STOPS
- SINGLE HANDLE
- BRASS CONSTRUCTION
- CONNECTION 1/2"
- WATER PRESSURE : 0.2-5 BAR
- RMP. 1.0 BAR MP
- 2X1/2" INLETS
- 1X1/2" OUTLETS

SCOPE OF DELIVERY

INTERNAL VALVE
EXTERNAL PLATE
HANDLE
DIVERTER HANDLE
INSTALLATION GUIDE

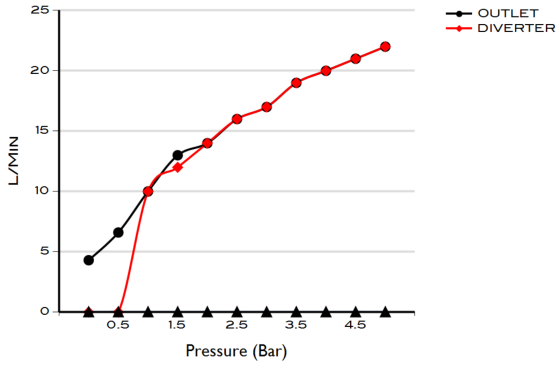

INTERNATIONAL WATER & WELLNESS

PRODUCT	COLLECTION	REFERENCE
Shower Controls	Wellness	Mohs 2 / Universal Box

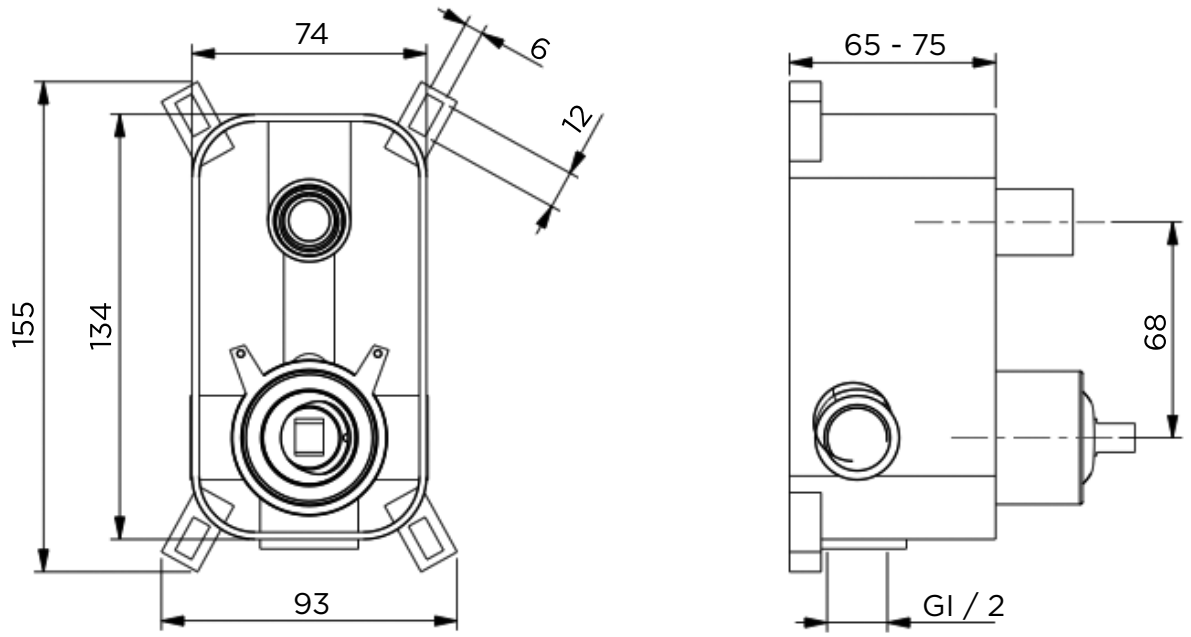

INTERNATIONAL WATER & WELLNESS

PRODUCT	COLLECTION	REFERENCE
Shower Controls	Wellness	Mohs 2 / Universal Box