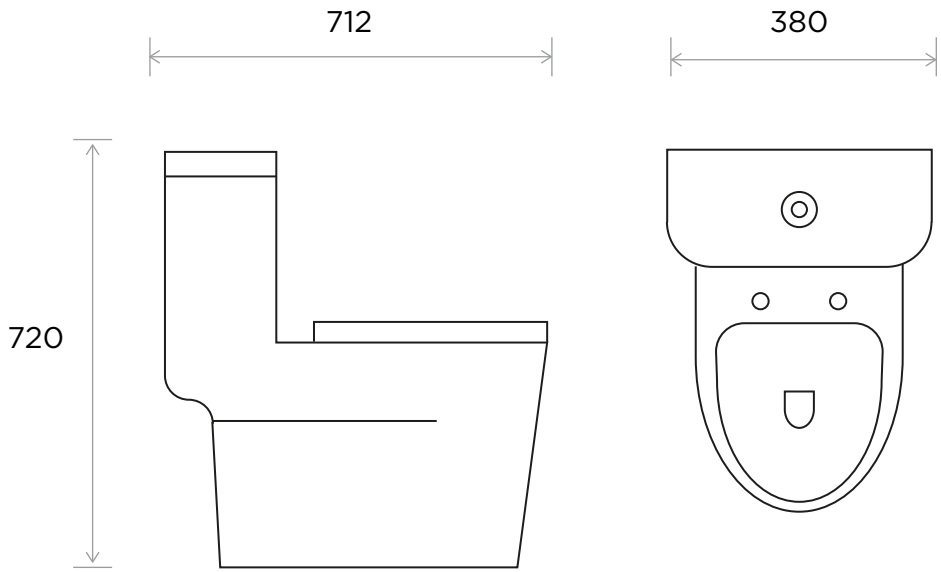

INTERNATIONAL
WATER & WELLNESS

COLLECTION	PRODUCT	SIZES	DESCRIPTION
Toilet	Craft	(all measurements in mm)	One piece siphonic WC. 12" / 16" (300 / 400mm) rough in. With soft close seat. Dual flush 0.8 / 1.20 gpf (3 / 5 lpf.) In accordance with ASME 112.19.2