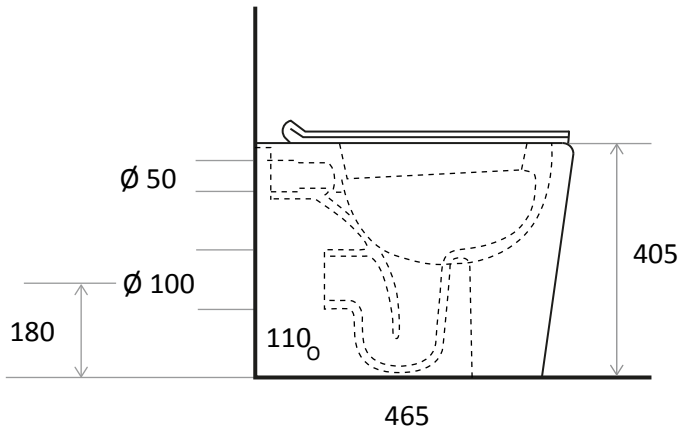

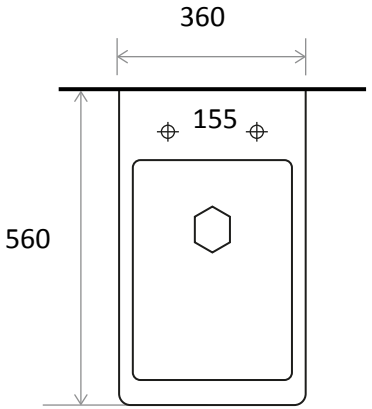

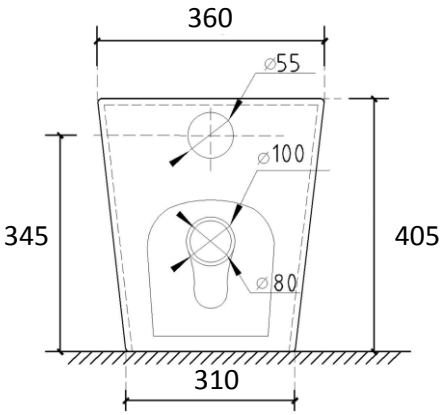

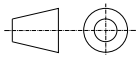

INTERNATIONAL WATER & WELLNESS

COLLECTION	PRODUCT	SIZES	DESCRIPTION
Toilet	Roma back to wall	(all measurements in mm)	Back to wall, wash down WC. With soft close seat. In accordance with ASME 112.19.2