reddot winner
brand design

WeAre360°

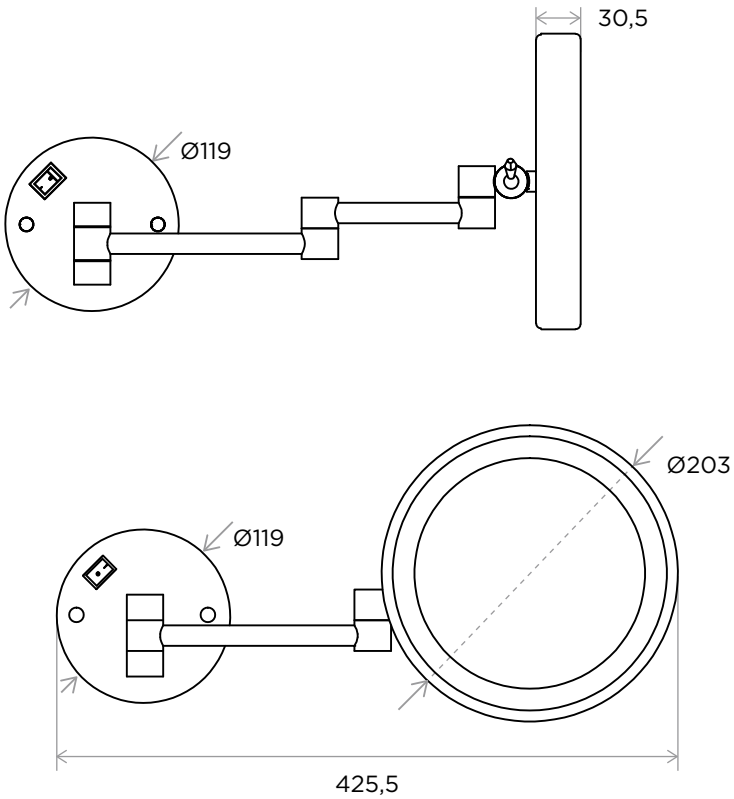

> SIZES IN MM.

5 YEAR LIMITED WARRANTY

INTERNATIONAL WATER & WELLNESS

COLLECTION	PRODUCT	CODE / COLOUR
Accesories Magnifying Mirror	**LS Wall 8A** 3x magnifying, extendable arm, chrome finish, white led light, ip44 waterproof.	LS-WAL-8APOL POLISHED CHROME LS-WAL-8ABRU BRUSHED NICKLE LS-WAL-8ABLA STAINLESS STEEL LS-WAL-8AGRA GRAPHITE LS-WAL-8ASS BLACK MATT CHROME LS-WAL-8AROS ROSE GOLD LS-WAL-8AGOL GOLD LS-WAL-8ABRA BRASS