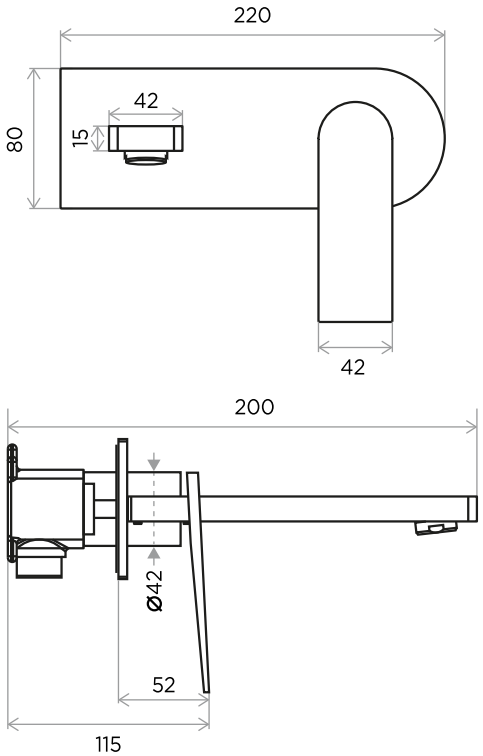

> SIZES IN MM.

INTERNATIONAL
WATER & WELLNESS

reddot winner
brand design

WeAre360°
ECO 5 l/min • LEED 1.8 l/min

CODE & COLOUR

COS-WAL-POL	POLISHED CHROME
COS-WAL-BRU	BRUSHED NICKLED
COS-WAL-BLA	STAINLESS STEEL
COS-WAL-GRA	GRAPHITE
COS-WAL-SS	BLACK MATT CHROME
COS-WAL-ROS	ROSE GOLD
COS-WAL-GOL	GOLD
COS-WAL-BRA	BRASS
COS-WAL-ABR	ANTIQUE BRASS

SCOPE OF DELIVERY

CONCEALED BASIN MIXER; HANDLE; SPOUT + BACK PLATE;
INSTALLATION MANUAL; CARE & MAINTENANCE GUIDE

TECHNICAL INFORMATION

PRODUCT: COSMO WALL
PRODUCT TYPE: CONCEALED BASIN MIXER
MATERIAL: BRASS
CONNECTION SIZE: 1/2”
WATER PRESSURED: 0.2-5 BAR
RMP: 0.5 BAR LP
–
CONCEALED BASIN MIXER
MONO BASIN
WALL MOUNTED
SINGLE LEVER
WITH WATER FLOW AERATOR

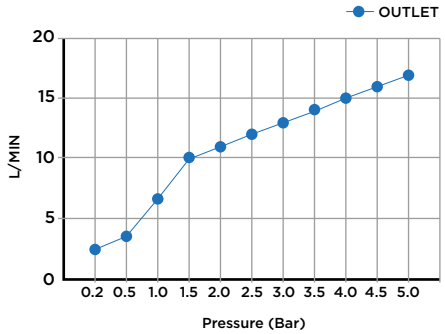

5 YEAR LIMITED WARRANTY

iwandw.com