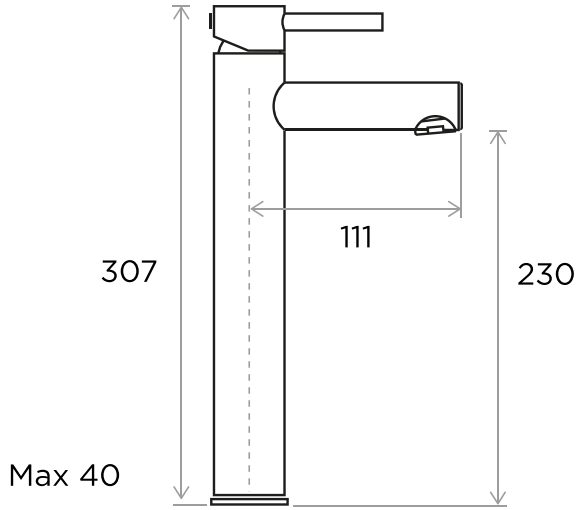

> SIZES IN MM.

INTERNATIONAL WATER & WELLNESS LTD · IWANDW.COM ·
10
YEAR LIMITED WARRANTY

PRODUCT DATA

Collection : Arc Tall

Product code :	Finish/Colour :
ARC-TAL-POL	POLISHED CHROME
ARC-TAL-BRU	BRUSHED NICKLE
ARC-TAL-SS	STAINLESS STEEL
ARC-TAL-GRA	GRAPHITE
ARC-TAL-BLA	BLACK MATT CHROME
ARC-TAL-ROS	ROSE GOLD
ARC-TAL-GOL	GOLD
ARC-TAL-BRA	BRASS

TECHNICAL INFORMATION

Product type : MONO BASIN MIXER
Material : BRASS
Connection Size : 1/2"
Water pressure : 0.2-5 BAR
RMP : 0.5 BAR LP
IN ACCORDANCE WITH ASME 112.18.1

MONO BASIN
DECK MOUNTED
SINGLE LEVER
WITH WATER FLOW AERATOR
2X 1/2"NUT X 450MM FLEXI PIPE
DRILL HOLE DIA 30-32 MM

SCOPE OF DELIVERY

MONO BASIN MIXER
2 X 1/2" FLEXIBLE PIPES
BASE PLATE
FIXING KIT
INSTALLATION MANUAL
CARE & MAINTENANCE GUIDE

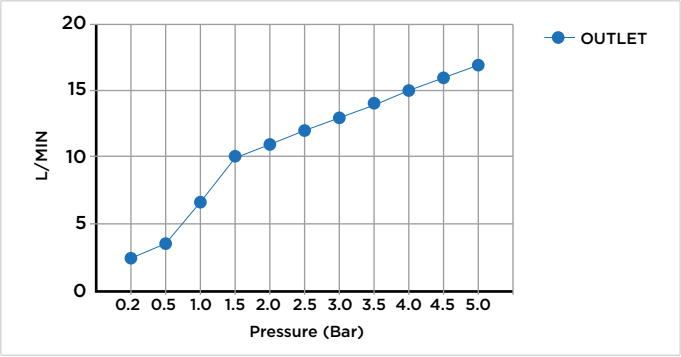

INTERNATIONAL WATER & WELLNESS

PRODUCT	COLLECTION	REFERENCE
Tap	Arc	Arc Tall