CUA-DMWS
Cuadro Deck Mount Widespread
Installation Instruction Manual

1. After you open the package, please check the physical object and the corresponding accessories.
2. The picture is only for reference,please make the object as the standard.
3. Accessories are subject to change without affecting use. No further notice.
4. Thank you for choosing our products.

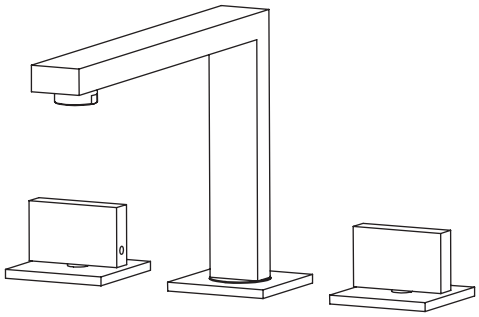

PARTS LIST

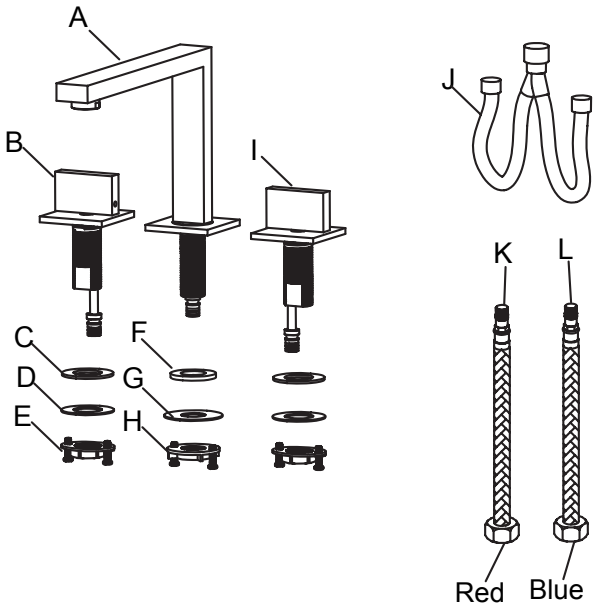

DIMENSIONAL DRAWING

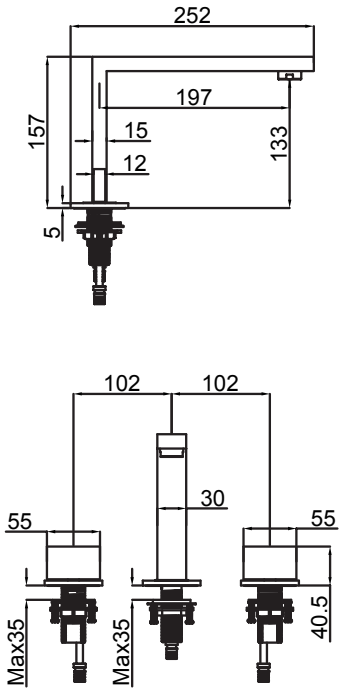

INSTALLATION NOTES

BEFORE INSTALLATION AND USE be careful! Before installing the product, the water supply pipe should be carefully cleaned to avoid any debris, welding residue, fiber products, or other impurities remaining inside the pipe. Foreign objects can enter the product through uncleaned piping systems or water supply networks, which can easily damage the sealing gasket/O-ring. To ensure a long service life of this product, please install a water inlet connector equipped with a filtering device and clean it regularly. Before putting the product into use, please remove the aerator and thoroughly clean it.

CUA-DMWS
Cuadro Deck Mount Widespread
Installation Instruction Manual

TECHNICAL PARAMETER

Maximum working pressure of 6 bar.
The recommended working pressure is 3 bar (if the water pressure exceeds 6 bar, it is recommended to install a pressure reducing valve).
To ensure optimal operation of the product, the inlet pressure (hot and cold water) must be balanced, with a pressure difference not exceeding ± 0.5 bar

INSTALLATION STEPS

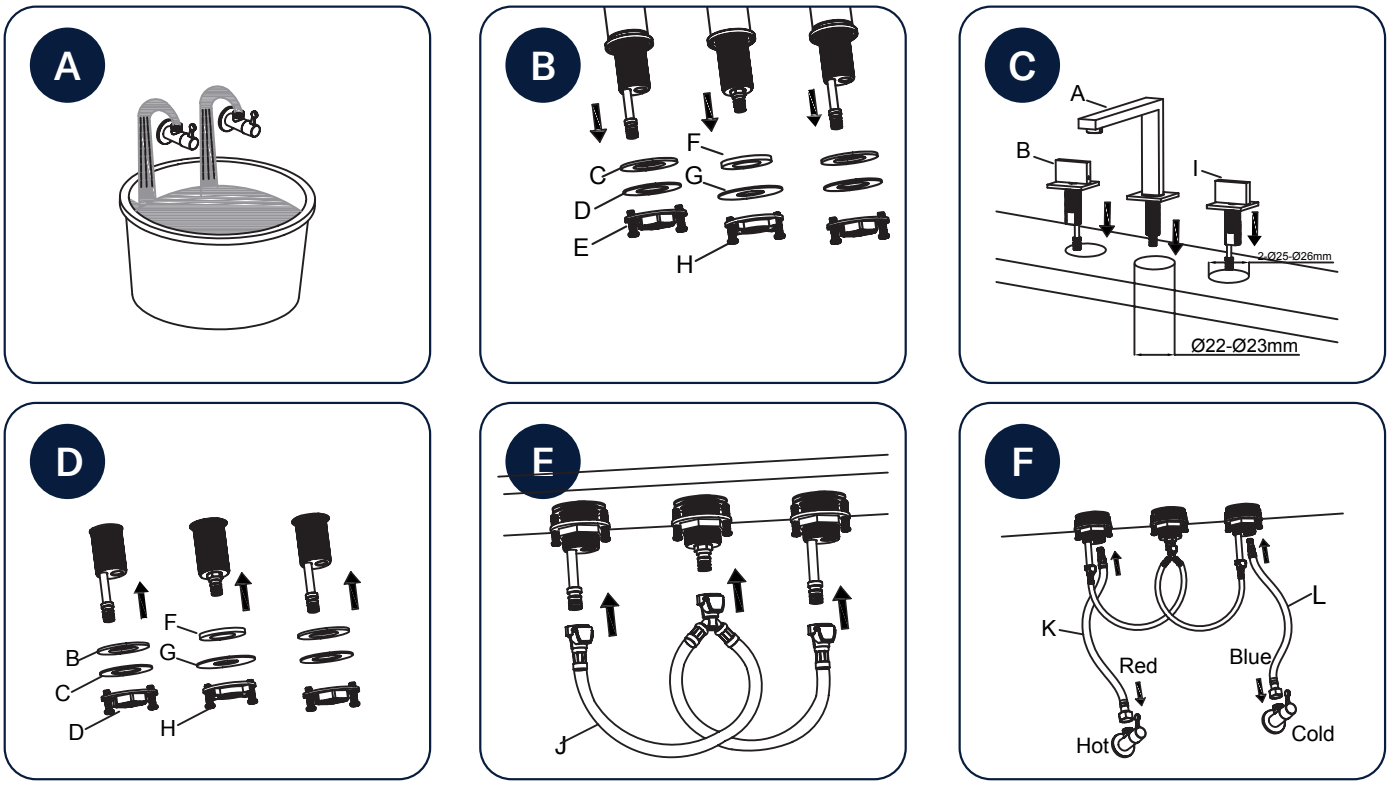

CLEAN AND CARE

To keep the surface of the faucet bright and clean, please clean the faucet regularly.
1. Please wash with clean water.
2. Please wipe with a soft cloth,do not wipe with hard objects.
3. Do not use detergent containing coarse particles such as detergent powder or polishing powder or nylon brush no, in order to avoid abrasion of the product.
4. Under normal water pressure, when the water output decreases, use a small brush to clean (refer to the picture).

